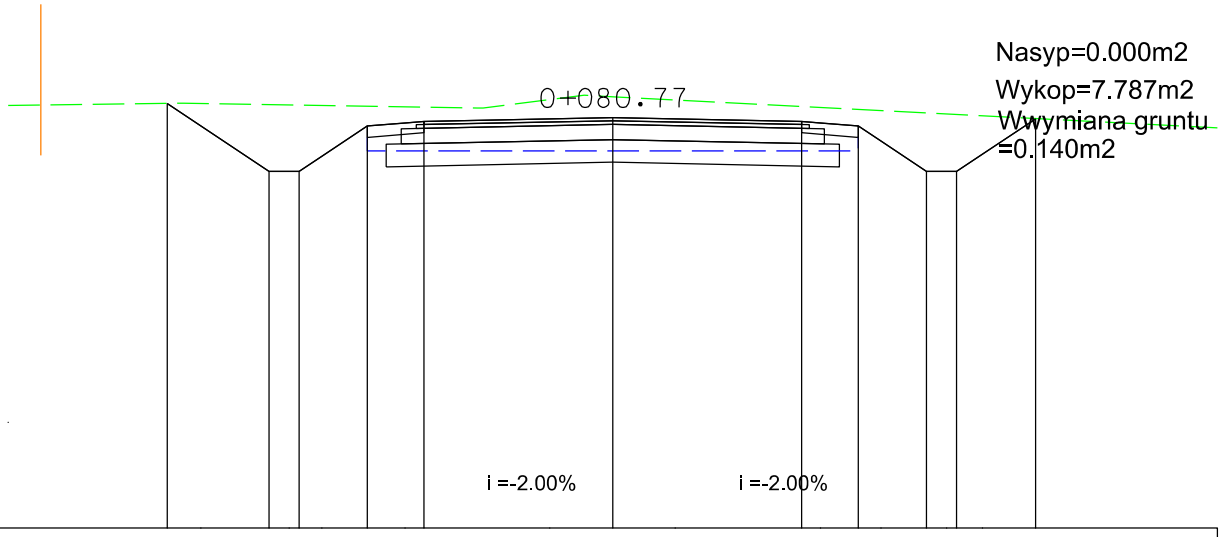
0+080.77
Nasyp=0.000m2
Wykop=7.787m2
Wwymiana gruntu
=0.140m2
i =-2.00%
i =-2.00%

| | | |